KIT POMPA BAKERLUX SHOP.PRO
BAKERLUX SHOP.PRO PUMP KIT
KIT POMPE BAKERLUX SHOP.PRO
KIT BOMBA BAKERLUX SHOP.PRO

XHC016

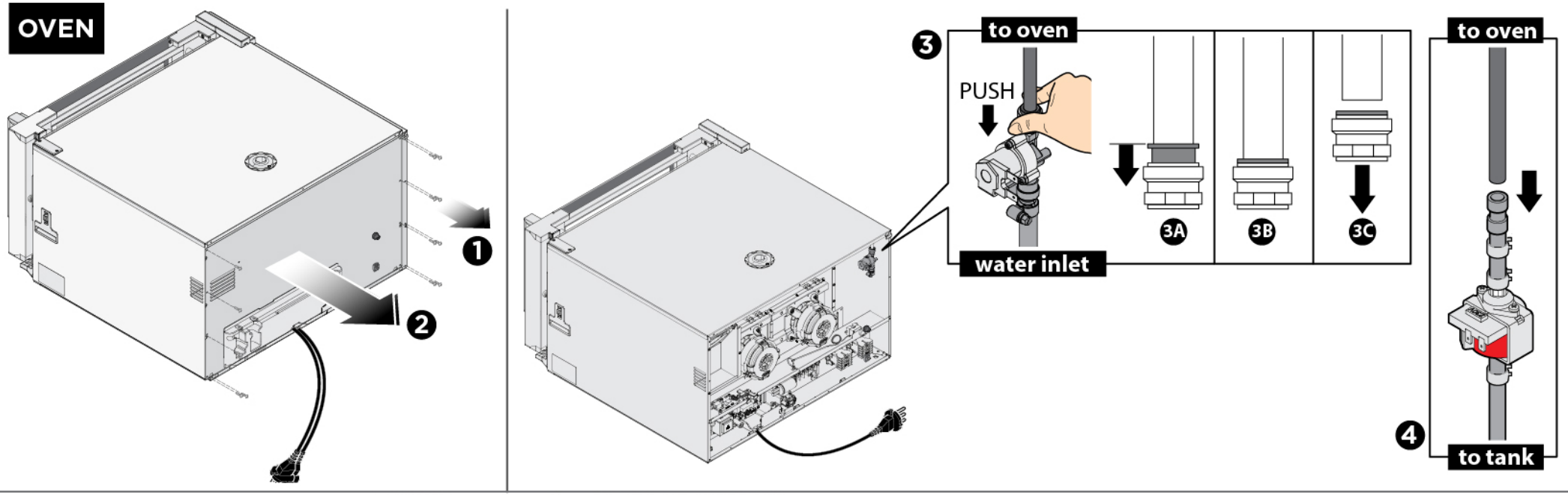

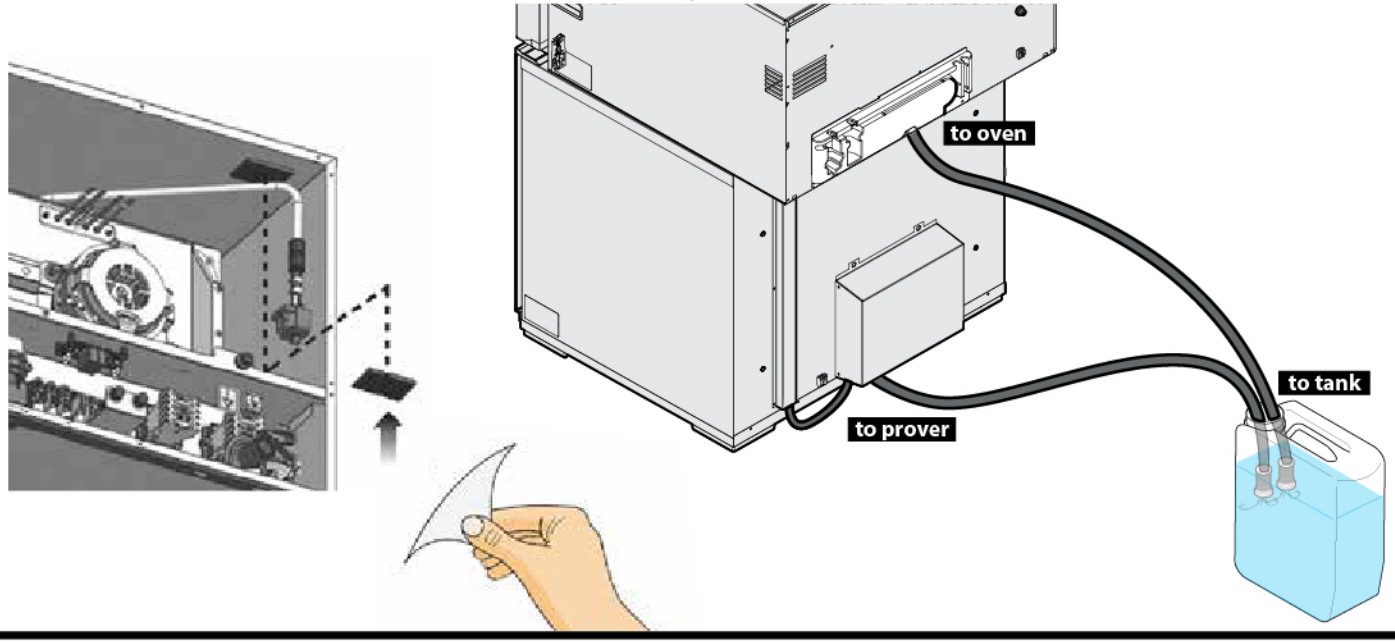

ATTIVARE LA MODALITA' POMPA DAL MENU SERVICE DEL PANNELLO COMANDI

ACTIVER LA MODALITÉ POMPE DANS LES RÉGLAGES SERVICE APRES VENTE DU PANNEAU DE CONTRÔLE

SELECT THE PUMP MODE ON THE SERVICE MENU OF THE CONTROL PANEL

ACTIVAR EL MODO DE USO CON BOMBA DESDE EL MENU SERVICE DEL PANEL DE CONTROL DEL HORNO

AKTIVIEREN SIE DEN PUMPENBETRIEB IN UNSEREM SERVICEMENÜ. DIESEN FINDEN SIE IN UNSEREM BEDIENPANEEL.

L11412A2.D01

KIT POMPA BAKERLUX SHOP.PRO
BAKERLUX SHOP.PRO PUMP KIT
KIT POMPE BAKERLUX SHOP.PRO
KIT BOMBA BAKERLUX SHOP.PRO

XEKPT-08XX-C
XEKPT-10XX-C



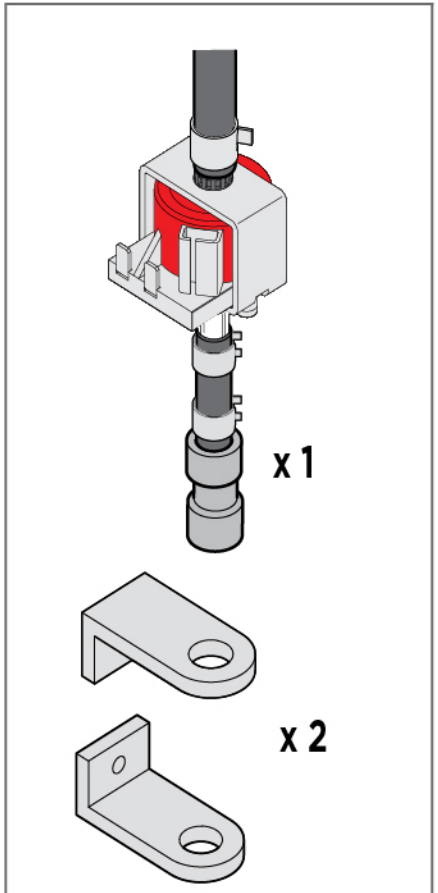

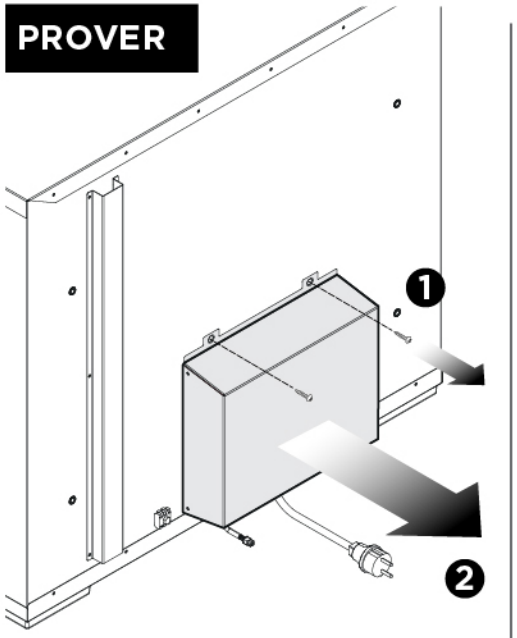

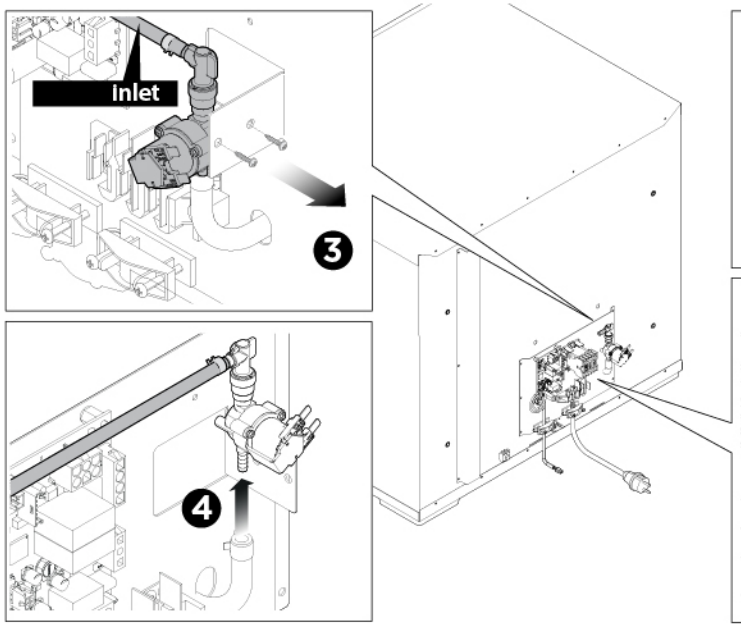

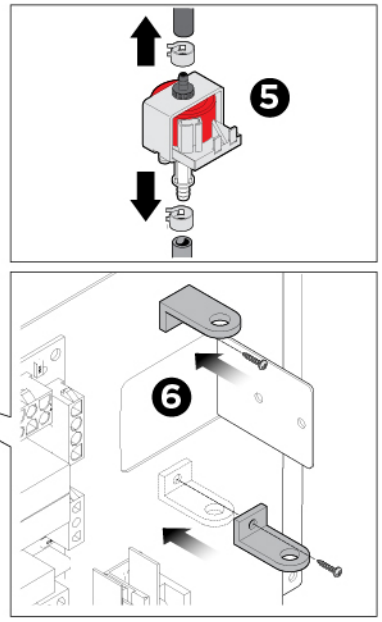

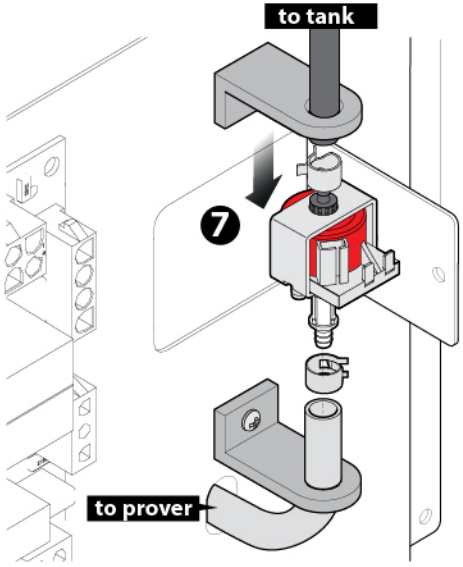

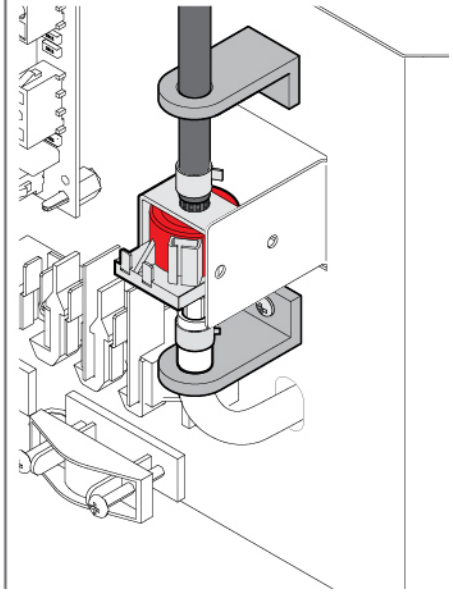

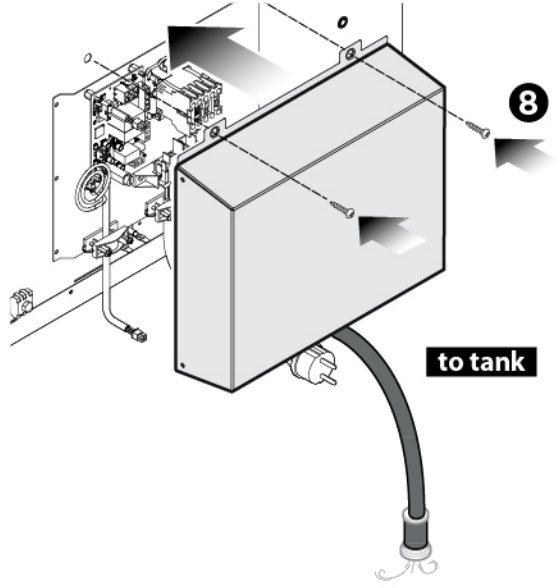

LI1412A2.D01

KIT POMPA BAKERLUX SHOP.PRO
BAKERLUX SHOP.PRO PUMP KIT
KIT POMPE BAKERLUX SHOP.PRO
KIT BOMBA BAKERLUX SHOP.PRO

XEKPT-08XX-B
XEKPT-10XX-B



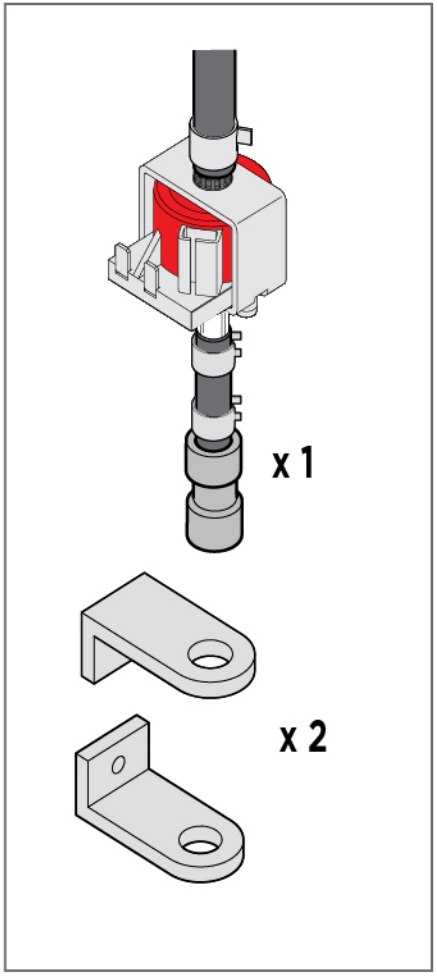

PROVER

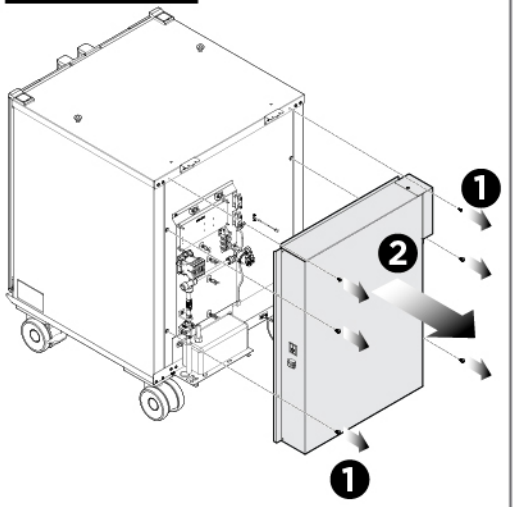

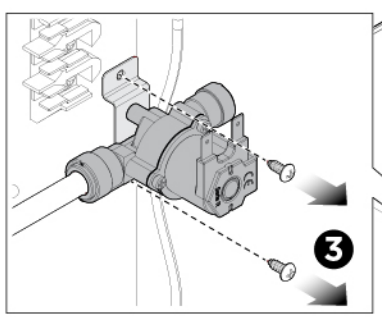

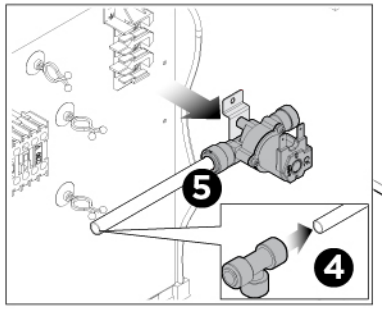

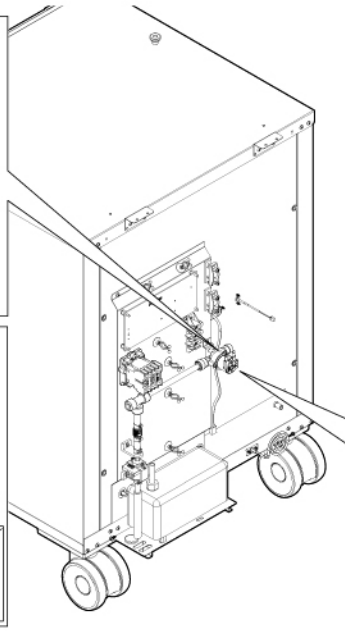

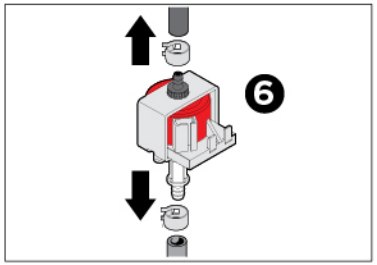

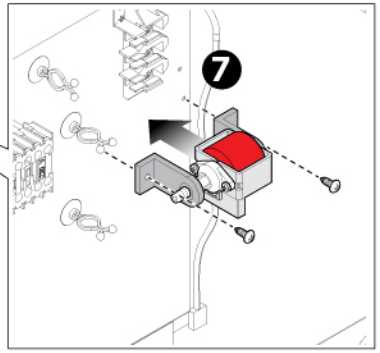

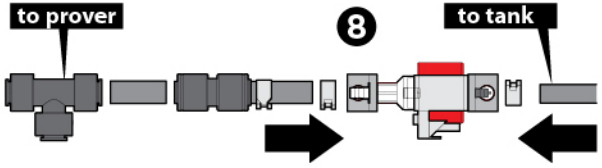

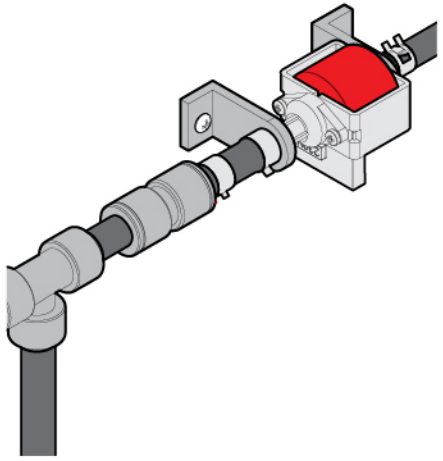

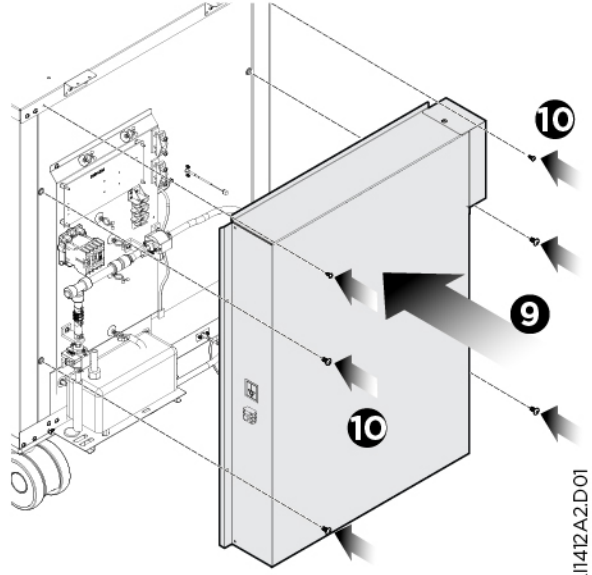

L11412A2.D01