SPEC.	N.	CODE	DENOMINAZIONE - DENOMINATION	PRICE
CE norms	* 1	CO0866	Push button - Pulsante	€ 18.00
01/04/08 f.p.(*)	1	SL2919	Push button - Pulsante	€ 9.50
	2	CO4315	Bottom - Fondo	€ 5.70
10µF	3	CO1442	Condenser - Condensatore	€ 9.00
1Ph+N+Gnd	4	SL1671	Electric cable - Cavo elettrico	€ 6.50
	5	CO4316	Calotte - Calotta	€ 27.50
6004 ZZ	6	SL0073	Bearing - Cuscinetto	
230V/1Ph/50Hz	7	CO2980	Motor - Motore	€ 76.00
6004 2RS	8	SL0223	Bearing - Cuscinetto	
	9	CO4329	Cap - Tappo	€ 6.08
	10	CO4319	Housing - Carcassa	€ 36.00
	11	CO4320	Casing - Bocca	€ 35.30
Without CE norms	12	CO4321	Sleeve - Bocchettone	€ 37.90
CE norms - In 01/01/11	12	CO5408	Sleeve - Bocchettone	€ 44.00
(Assembly) CE norms 31/12/10 f.p.(*)	12	CO5513	Sleeve+Hopper+Pusher - Bocchettone+Tramoggia+Pestello	€ 45.60
(Assembly) 31/03/15 f.p.(*)	13	CO4322	Screw shaft - Elica	€ 29.50
da matricola 150205537	* 13	CO7560	Screw shaft - Elica	€ 32.50
31/03/15 f.p.(*)	14	CO4323	Pivot - Perno	€ 10.80
da matricola 150205537	14	CO7561	Pivot - Perno	€ 12.00
	* 15	//////////////	Cutter - Coltello	
	* 16	//////////////	Cutter - Coltello	
	17	CO4324	Handwheel - Volantino	€ 20.30
6202 2RS	18	SL2472	Bearing - Cuscinetto	€ 5.50
	19	CO4325	Gear - Ingranaggio	€ 24.00
	* 20	CO1038	Switch - Interruttore	
ø25xø35x7	21	CO2437	Oil seal - Paraolio	€ 5.00
	22	CO4326	Shaft - Albero	€ 22.50
	* 23	CO4327	Knob - Pomello	€ 3.10
	24	CO4328	Base - Base	€ 35.00
CE norms - In 01/01/11	25	CO5354	Hopper - Tramoggia	€ 20.30
Without CE norms - CE norms 31/12/10 f.p.(*)	25	SL0136	Hopper - Tramoggia	€ 18.00
CE norms - In 01/01/11	26	CO5404	Pusher - Pestello	€ 5.60
	27	CO7582	Cap - Tappo	€ 2.50

*Ricambio consigliato - Advised spare parts

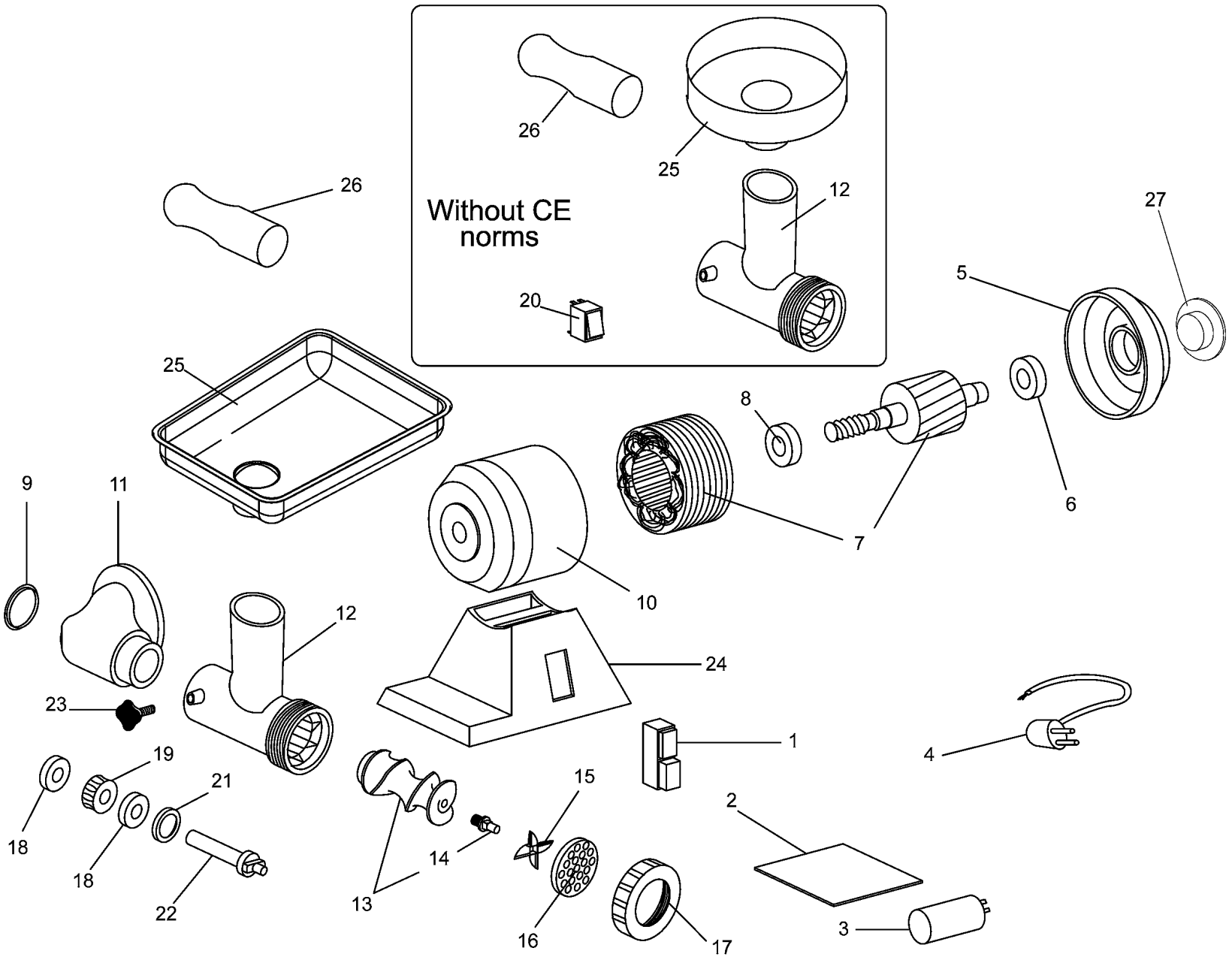

POS.	CODE
1	CO0866
1	SL2919
2	CO4315
3	CO1442
4	SL1671
5	CO4316
6	SL0073
7	CO2980
8	SL0223
9	CO4329
10	CO4319
11	CO4320
12	CO4321
12	CO5408
12	CO5513
13	CO4322
13	CO7560
14	CO4323
14	CO7561
15	///////////
16	///////////
17	CO4324
18	SL2472
19	CO4325
20	CO1038
21	CO2437
22	CO4326
23	CO4327
24	CO4328
25	CO5354
25	SL0136
26	CO5404
27	CO7582