| 版本 | 1.0 |
|---|---|

| 变更内容 | | | | |
|---|---|---|---|---|
| 版次 | 区间 | 内容 | 绘图 | 变更日期 |
| | | | | |

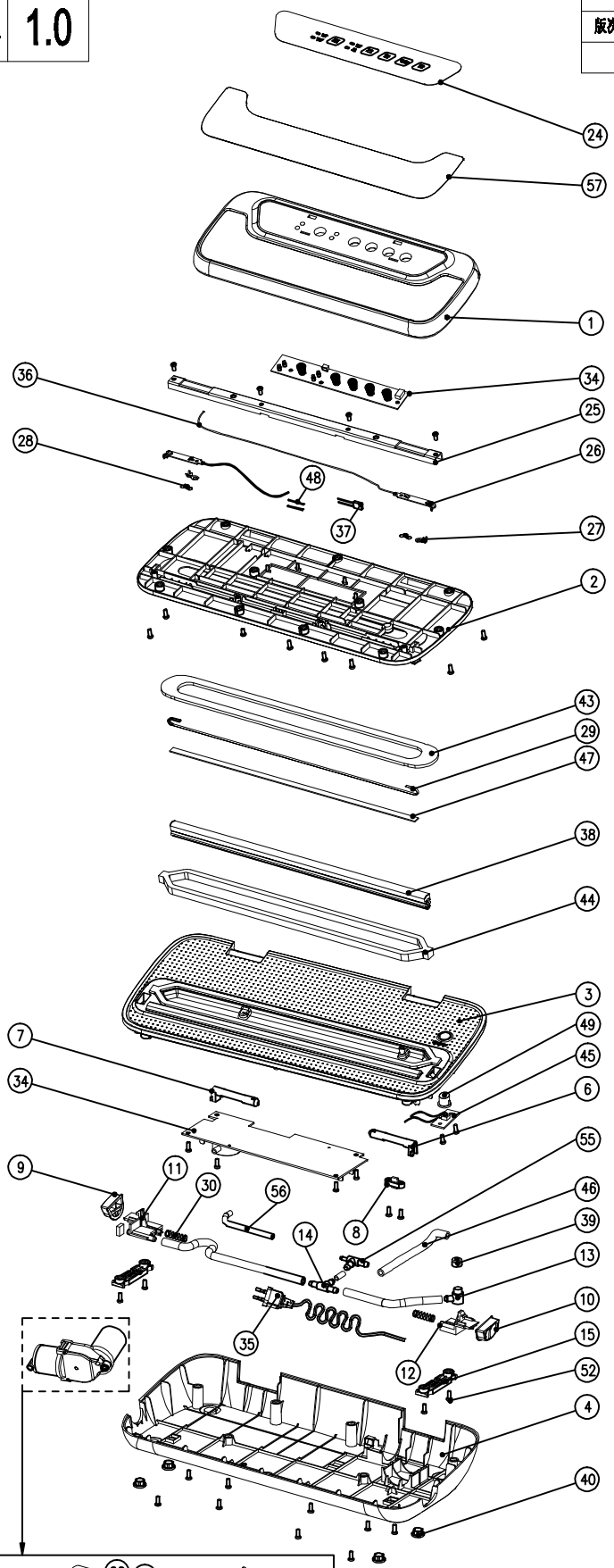


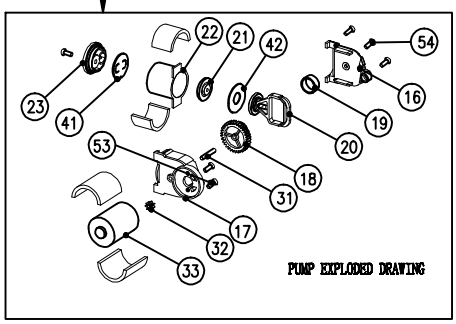


| NO | NAME | Material Science | Pcs |
|---|---|---|---|
| 57 | Top-panel | SUS430 | 1 |
| 56 | Tube-2 | PVC | 1 |
| 55 | 3-way-2 | POM | 1 |
| 54 | Screw TA2.5*8 | 45#/Plated Ni | 4 |
| 53 | Screw PM2.0*5 | 45#/Plated Ni | 2 |
| 52 | Screw PB3*10 | 45#/Plated Ni | 15 |
| 51 | Screw PB3*8 | 45#/Plated Ni | 23 |
| 50 | NTC | | 1 |
| 49 | Pumping tank key | ABS | 1 |
| 48 | Heat shrink tube | PVC | 6 |
| 47 | Mica sheet | | 1 |
| 46 | Tube-1 | PVC | 4 |
| 45 | PCB-3 | | 1 |
| 44 | Lower gas cotton | Foam | 1 |
| 43 | Upper seal gas cotton | Foam | 1 |
| 42 | Teflon | Teflon | 1 |
| 41 | pump-silica | silica | 1 |
| 40 | Foot | Silica | 4 |
| 39 | L sealing ring | Silica | 1 |
| 38 | Silica-L | Silica | 1 |
| 37 | Temperature fuse | | 1 |
| 36 | Wireway | | 4 |
| 35 | Power cord | | 1 |
| 34 | PCB | | 1 |
| 33 | motor | | 1 |
| 32 | gear | Fe | 1 |
| 31 | gear-shaft | SUS303 | 1 |
| 30 | Spring-2 | 65Mn | 2 |
| 29 | Heating wire | | 1 |
| 28 | Spring-1 | 65Mn | 2 |
| 27 | Connector | Cu | 2 |
| 26 | heating wire bracket | SPCC | 2 |
| 25 | Sealing bracket | SPCC | 1 |
| 24 | display-panel | PC | 1 |
| 23 | pump-cover | POM | 1 |
| 22 | pump | POM | 1 |
| 21 | Connecting rod cap | POM | 1 |
| 20 | Connecting rod | POM | 1 |
| 19 | gear Cost | PA66+30%GF | 1 |
| 18 | gear-1 | TPEE | 1 |
| 17 | gearbox-cover | PA66+30%GF | 1 |
| 16 | gearbox-face | PA66+30GF | 1 |
| 15 | block | ABS | 2 |
| 14 | 3-way-1 | ABS | 1 |
| 13 | 2-way | ABS | 1 |
| 12 | Right-Buckle | ABS | 1 |
| 11 | Left-Buckle | ABS | 1 |
| 10 | Right button | ABS | 1 |
| 9 | Left button | ABS | 1 |
| 8 | Line-block | ABS | 1 |
| 7 | Left axis | PA66+30%GF | 1 |
| 6 | Right axis | PA66+30%GF | 1 |
| 5 | | | |
| 4 | Lower bottom shell | ABS | 1 |
| 3 | Lower shell | ABS | 1 |
| 2 | Upper housing | ABS | 1 |
| 1 | Upper shell | ABS | 1 |

| 未注公差表 | |
|---|---|
| 角度 | ±0.2° |
| 0–5 | ±0.05 |
| 5–20 | ±0.1 |
| 20–50 | ±0.15 |
| 50–200 | ±0.2 |
| 200–500 | ±0.3 |
| 500以上 | ±0.6 |

| 绘图 | Fred | 2018-01-15 |
|---|---|---|
| 校对 | | |
| 审核 | | |
| 核准 | | |

机型：E5900-MS

名称：Exploded drawing

| 绘图视角 | 单位 | 纸张 | 比例 |
|---|---|---|---|
| | mm | A4 | |
| 共 1 页 | | 第 1 页 | |

图号：

材料：

伊米利雅电器有限公司
Emiliya Electrical Appliances Co.,Ltd