XEFT-03HS-ELDV/0.D02 3 460X330 LED CONTROL STEFANIA OVEN

Assembly code	Assembly description	Assembly image
ASM3401A/0.D01	Cooking chamber	
ASM3407A/0.D01	External cover	
ASM3419A/0.D00	Door	
ASM3438A/0.D01	Electrical system	

ASM3401A/0.D01 - Cooking chamber

FRONT

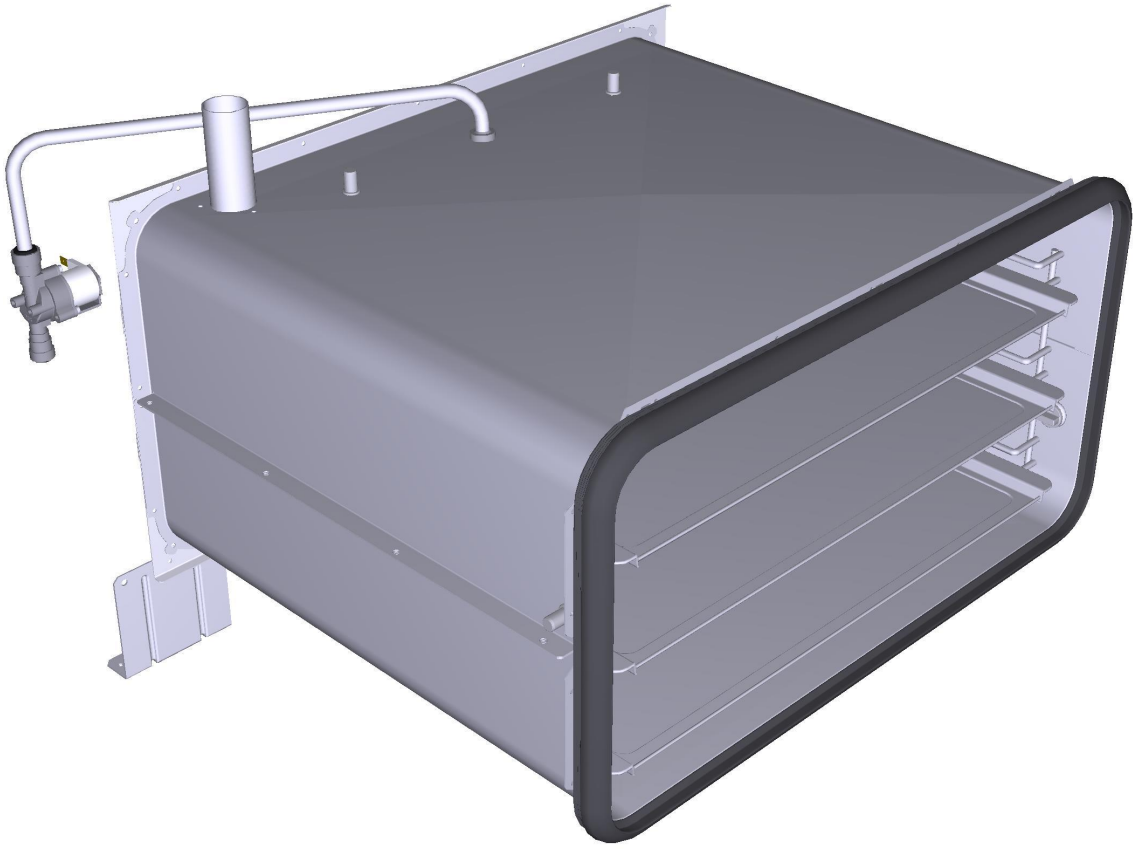

ASM3401A/0.D01 - Cooking chamber

REAR

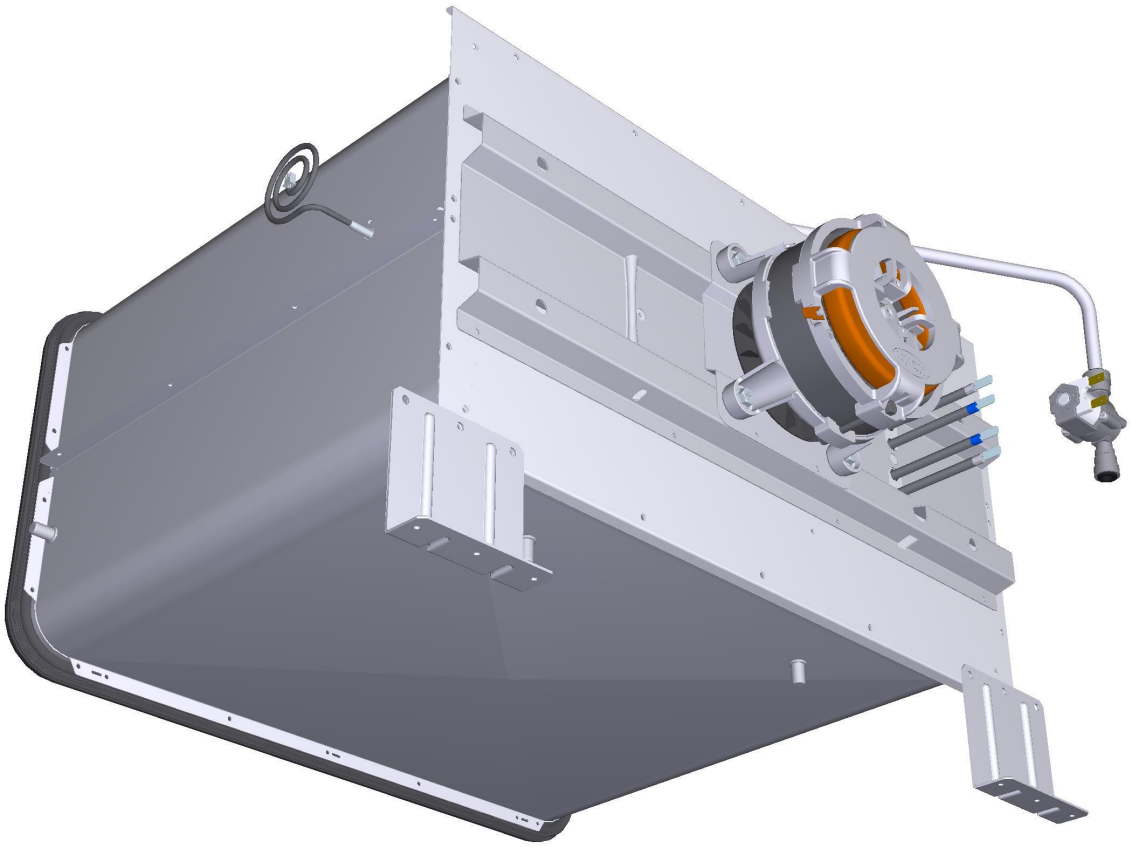

COMPONENT			SPARE PART		
Code	*Description*	*Image*	*Code*	*Description*	*Kit components*
0G1651B	STEFANIA SP FAN GUARD		0G1651B0	STEFANIA SP FAN GUARD	
0H7875A	SHOP.PRO MUFFLE SUPPORT BRACKET		0H7875A0	SHOP.PRO MUFFLE SUPPORT BRACKET	
TR1105A	L1000 PT100 TEMPERATURE PROBE		KTR1105A	PT100 L1000 TEMPERATURE PROBE KIT	Code / Description / Qty / UOM GN1120A1 NTC TEMPERATURE PROBE SEAL 1.000 PC GN1285A0 NTC TEMPERATURE PROBE SEALING 1.000 PC SL1045A0 S57 BLACK SILICONE - 80ml CARTRIDGE 1.000 PC TR1105A4 L1000 PT100 TEMPERATURE PROBE 1.000 PC VI1220A1 4,2x12 TCB SELF-TAPPING SCREW 2.000 PC VM1464A1 CT BT TEMPERATURE PROBE COVER 1.000 PC VM1465A1 CT BT TEMPERATURE PROBE COVER 1.000 PC VM2052A0 LM CORE PROBE COVE 1.000 PC

COMPONENT			SPARE PART		
Code	*Description*	*Image*	*Code*	*Description*	*Kit components*
EL1251A	1-WAY WATER SOLENOID VALVE		KEL1251A	JG D8-D10 1 WAY SOLENOID VALVE KI	Code / Description / Qty / UOM EL1251A0 — 1-WAY WATER SOLENOID VALVE — 1.000 — PC
0H3020A	MOTOR SHAFT SEALING DISC		0H3020A1	MOTOR SHAFT SEALING DISC	
0H7170A	MM MOTOR GLASS WOOL PLATE		0H7170A0	MM MOTOR GLASS WOOL PLATE	
GN1547A	SHAFT GASKET D11.8		KGN1547A	D11.6 MOTOR SHAFT GASKET 3PCS KIT	Code / Description / Qty / UOM GN1547A1 — SHAFT GASKET D11.8 — 3.000 — PC
MT1012A	330W 230V MOTOR		KVN1130A	LUX ≤08.2017/L.MISS/S.5/ 5E MOTOR KIT	Code / Description / Qty / UOM 0H4305A1 — ST. STEEL MOTOR SHAFT SEALING DISC — 1.000 — PC GN1140A3 — MOLDED MOTOR HOLDER GASKET — 1.000 — PC VI1034A0 — STAINLESS STEEL WASHER 8.4x16x1 — 1.000 — PC

COMPONENT			SPARE PART		
Code	*Description*	*Image*	*Code*	*Description*	*Kit components*
MT1012A	330W 230V MOTOR		KVN1130A	LUX ≤08.2017/L.MISS/S.5/ 5E MOTOR KIT	Code / Description / Qty / UOM VI1256A0 M8 DIN 980M ST. STEEL SELF LOCKING NUT 1.000 PC VM2196A0 MOTOR NUT FASTENING BUSHING 1.000 PC VN1130A1 330W 230V 50/60HZ MOTO 1.000 PC
			KMT1012A	LUX >08.2017 / MIND.MAPS 330W MOTOR KIT	Code / Description / Qty / UOM 0H2842A0 MT1012 CENTERING JI 1.000 PC 0H4305A1 ST. STEEL MOTOR SHAFT SEALING DISC 1.000 PC GN1140A3 MOLDED MOTOR HOLDER GASKET 1.000 PC MT1012A0 330W 230V MOTOR 1.000 PC VE1550A0 5X3 MM NEODYMIUM MAGNET 1.000 PC VI1077A1 SCREW M6x12 TE INOX 1.000 PC VI1521A0 STAINLESS STEEL WASHER D=6 6592 1.000 PC VI1966A0 M4X14 FLATHEAD SCREW 1.000 PC VM1635A0 MAGNET HOLDING DIS 1.000 PC
VN1172A	M8 NUT 8 BLADES H40 D195 FAN		KVN1172A	D195 H40 M8 NUT 8 BLADES FAN KIT	Code / Description / Qty / UOM VI1077A1 SCREW M6x12 TE INOX 1.000 PC VI1521A0 STAINLESS STEEL WASHER D=6 6592 1.000 PC VN1172A0 M8 NUT 8 BLADES H40 D195 FAN 1.000 PC

COMPONENT			SPARE PART		
Code	*Description*	*Image*	*Code*	*Description*	*Kit components*
RS1282A	2700W 230V+210W 160V 4TURNS H60 ELEMENT		KRS1282B	4TURN HEAT ELEM 2700W 230V+260W 135V KIT	Code / Description / Qty / UOM GN1327A0 HEATING ELEMENT GASKET 1.000 PC RS1282B0 1.000 PC SL1045A0 S57 BLACK SILICONE - 80ml CARTRIDGE 1.000 PC VI1220A1 4,2x12 TCB SELF-TAPPING SCREW 2.000 PC
GRL1005A	LineMiss Stefania RIGHT/LEFT LAT. GRID		KGRL1005A	R/L CHROM. PLATED LATERAL SUPP KIT	Code / Description / Qty / UOM GRL1005A2 LineMiss Stefania RIGHT/LEFT LAT. GRID 2.000 PC
VM1815A	LATERAL SUPPORTS FIXING BOLT	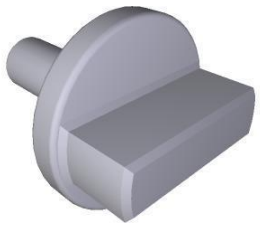	KVM1815A	MISS/MICRO/S4/S3 THUMB SCREW 10 PCS KIT	Code / Description / Qty / UOM VM1815A0 LATERAL SUPPORTS FIXING BOLT 10.000 PC
GN1596A	GN1110A - SHOP.PRO STEFANIA DOOR GASKET	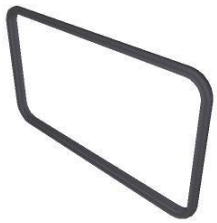	KGN1596A	BL SHOP.PRO STEFANIA DOOR GASKET KIT	Code / Description / Qty / UOM GN1110A2 Line Miss/XVC105-055/XK/XL DOOR GASKE 1.500 M
RC1170A	M14 H=7 CH=22 STAINLESS STEEL NUT	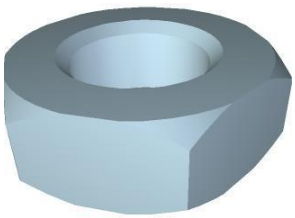	KRC1170A	M14 H8 CH22 NUT - 10 PCS. KIT	Code / Description / Qty / UOM RC1170A1 M14 H=7 CH=22 STAINLESS STEEL NUT 10.000 PC

COMPONENT			SPARE PART		
Code	*Description*	*Image*	*Code*	*Description*	*Kit components*
TB1568A	ARI-STE-ROS SP WELDED EXT HUMIDITY PIPE		TB1568A0	ARI-STE-ROS SP WELDED EXT HUMIDITY PIPE	
TB1574A	FUME CHIMNEY D30 SHOP PRO		TB1574A0	FUME CHIMNEY D30 SHOP PRO	
TB1577B	STEFANIA SP INTERNAL HUMIDITY PIPE		TB1577B0	STEFANIA SP INTERNAL HUMIDITY PIPE	

ASM3407A/0.D01 - External cover

FRONT

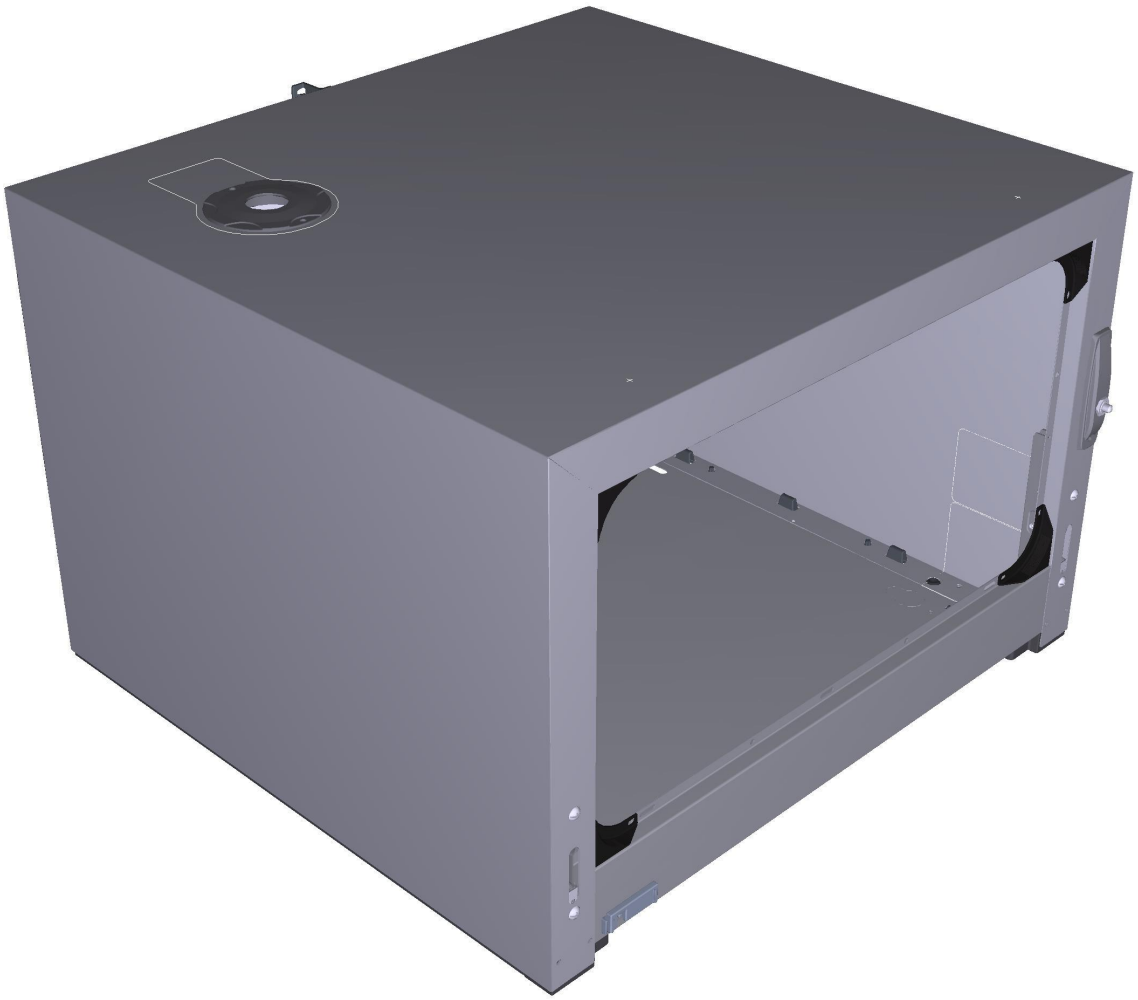

ASM3407A/0.D01 - External cover

REAR



ASM3407A/0.D01 External cover

COMPONENT			SPARE PART		
Code	*Description*	*Image*	*Code*	*Description*	*Kit components*
0D2401B	0D2401B0		0D2401B1	STEFANIA SP DROP-DOWN EXTERNAL CASING	
0D2409A	SP600 INF FRONT PROFILE DROP DOWN DOOR		0D2409A0	SP600 INF FRONT PROFILE DROP DOWN DOOR	
0E1381A	SP600 EXTERNAL BOTTOM PANEL	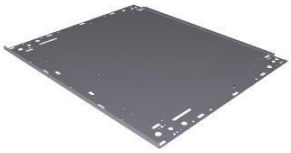	0E1381A1	STEFANIA SP DROP-DOWN EXTERNAL CASING	
0F1541B	STEFANIA SP BACK PANEL		0F1541B0	STEFANIA SP BACK PANEL	
CR1000A	HINGE LATCH L.M.		KCR1000A	LM HINGES LATCH KIT	Code / Description / Qty / UOM CR1000A0 HINGE LATCH L.M. 1.000 PC VI1280A3 M5x10 TC1/2T SCREW 2.000 PC

ASM3407A/0.D01 External cover

COMPONENT			SPARE PART		
Code	*Description*	*Image*	*Code*	*Description*	*Kit components*
VM1750A	BRASS COMB CLAM		KVM1750A	COMB TERMINAL BLOCK KIT	Code: VI1040A0 — INDENTED INTERNAL WASHER D=6 ZN — Qty: 2.000 — UOM: PC Code: VM1750A0 — BRASS COMB CLAMP — Qty: 1.000 — UOM: PC
VM2502A	BAKERLUX SHOP.PRO CHIMNEY RING		KVM2502A	BAKERLUX SHOP.PRO CHIMNEY RING KIT	Code: VM2502A0 — BAKERLUX SHOP.PRO CHIMNEY RIN — Qty: 1.000 — UOM: PC
VM2495A	SP COOLING FAN SUPPORT		KVM2495A	COOLING FAN SUPPORT KIT	Code: VI1220A1 — 4,2x12 TCB SELF-TAPPING SCREW — Qty: 2.000 — UOM: PC Code: VM2495A0 — SP COOLING FAN SUPPORT — Qty: 1.000 — UOM: PC
VN1175A	230V 50/60Hz 120x120 COOLING DOWN FAN		KVN1175A	120x120 230V 50/60Hz COOLING FAN KIT	Code: VN1175A0 — 230V 50/60Hz 120x120 COOLING DOWN FAN — Qty: 1.000 — UOM: PC
VE1295A	MK 16A 230V DOOR MICROSWITCH		KVE1295A	16A 230V DOOR MICROSWITCH KIT	Code: VE1295A0 — MK 16A 230V DOOR MICROSWITC — Qty: 1.000 — UOM: PC

ASM3407A/0.D01 External cover

COMPONENT			SPARE PART		
Code	*Description*	*Image*	*Code*	*Description*	*Kit components*
VM2508A	BAKERLUX SHOP.PRO DOOR SWITCH COVER		KVM2508A	BAKERLUX SHOP.PRO MICROSWITCH COVER KIT	Code: VM2508A0 — Description: BAKERLUX SHOP.PRO DOOR SWITCH COVE — Qty: 1.000 — UOM: PC
VM2481A	FRONT EXTERNAL COVER LEFT CAP S		KVM2481A	BL SP LEFT EXT COVER FRONT PANEL CAP KIT	Code: VM2481A0 — Description: FRONT EXTERNAL COVER LEFT CAP SP — Qty: 1.000 — UOM: PC
VM2480A	FRONT EXTERNAL COVER RIGHT CAP SP		KVM2480A	BL SP RIGHT EXT COVER FRONT PANEL CAP	Code: VM2480A0 — Description: FRONT EXTERNAL COVER RIGHT CAP SP — Qty: 1.000 — UOM: PC
VM1631A	PLUS INNER GLASS PUSHING CAP		KVM1631A	CAP FOR INTERNAL GLASS 10 PCS KIT	Code: VM1631A0 — Description: PLUS INNER GLASS PUSHING CAP — Qty: 10.000 — UOM: PC
VM2490A	460X330 SP EXT FRONT BOTTOM GASKET		KVM2490A	SP 460X330 EXT BOTTOM PANEL GASKET KIT	Code: VM1794A0 — Description: 250x4.8 PA66 BLACK CLAMP — Qty: 2.000 — UOM: PC Code: VM2103A0 — Description: CLAMP LOCK — Qty: 2.000 — UOM: PC Code: VM2490A0 — Description: 460X330 SP EXT FRONT BOTTOM GASKET — Qty: 2.000 — UOM: PC

COMPONENT			SPARE PART		
Code	*Description*	*Image*	*Code*	*Description*	*Kit components*
VM2491A	460X330 BL SP LATER BOTTOM PANEL GASKET		KVM2491A	SP 460X330 LAT BOTT PANEL GASKET 2PC KIT	Code / Description / Qty / UOM VM1631A0 — PLUS INNER GLASS PUSHING CAP — 4.000 — PC VM1794A0 — 250x4.8 PA66 BLACK CLAMP — 2.000 — PC VM2103A0 — CLAMP LOCK — 2.000 — PC VM2491A1 — 460x330 BLSP LATERAL BOTTOM PANEL GASKE — 2.000 — PC
VM1222A	CABLE LOCKS SP ACCESSORIES EL CONNECTION		VM1222A0	CABLE LOCKS SP ACCESSORIES EL CONNECTION	
VM2249A	COOKING CHAMBER FRONT CORNER		KVM2249A	CHAMBER FRONT PROFILE CORNER KIT	Code / Description / Qty / UOM VM2249A0 — COOKING CHAMBER FRONT CORNER — 1.000 — PC
VM2455A	BL SP CONTROL BOARD CABLE PASS-THROUGH	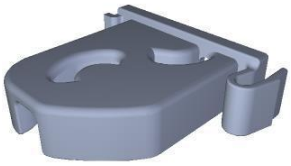	KVM2455A	BL SP CONTR BOARD CABLE PASS-THROUGH KIT	Code / Description / Qty / UOM VM2455A1 — SP CONTROL BOARD CABLE PASS-THROUGH CLIP — 1.000 — PC

ASM3419A/0.D00 - Door

FRONT

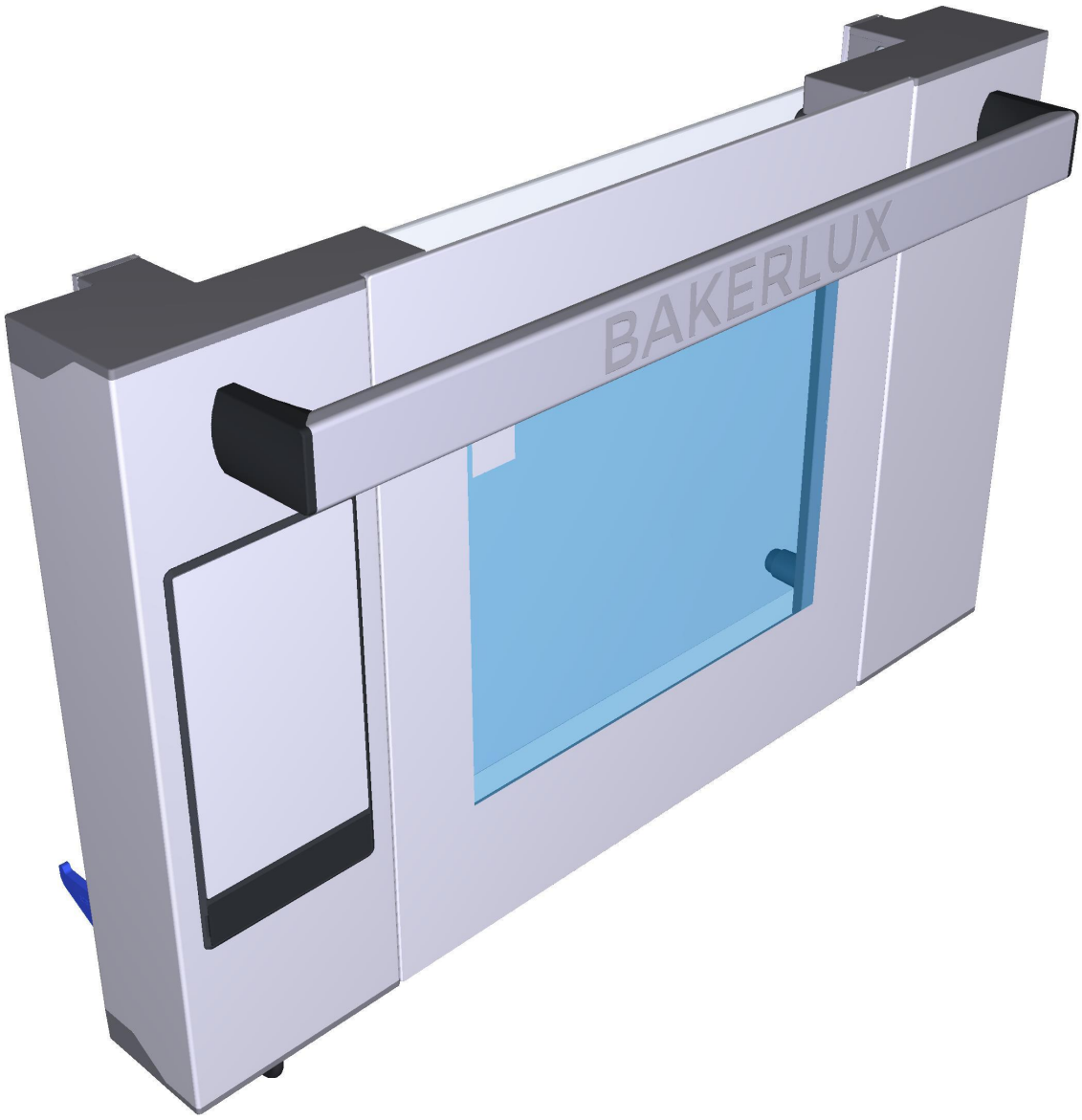

ASM3419A/0.D00 - Door

REAR

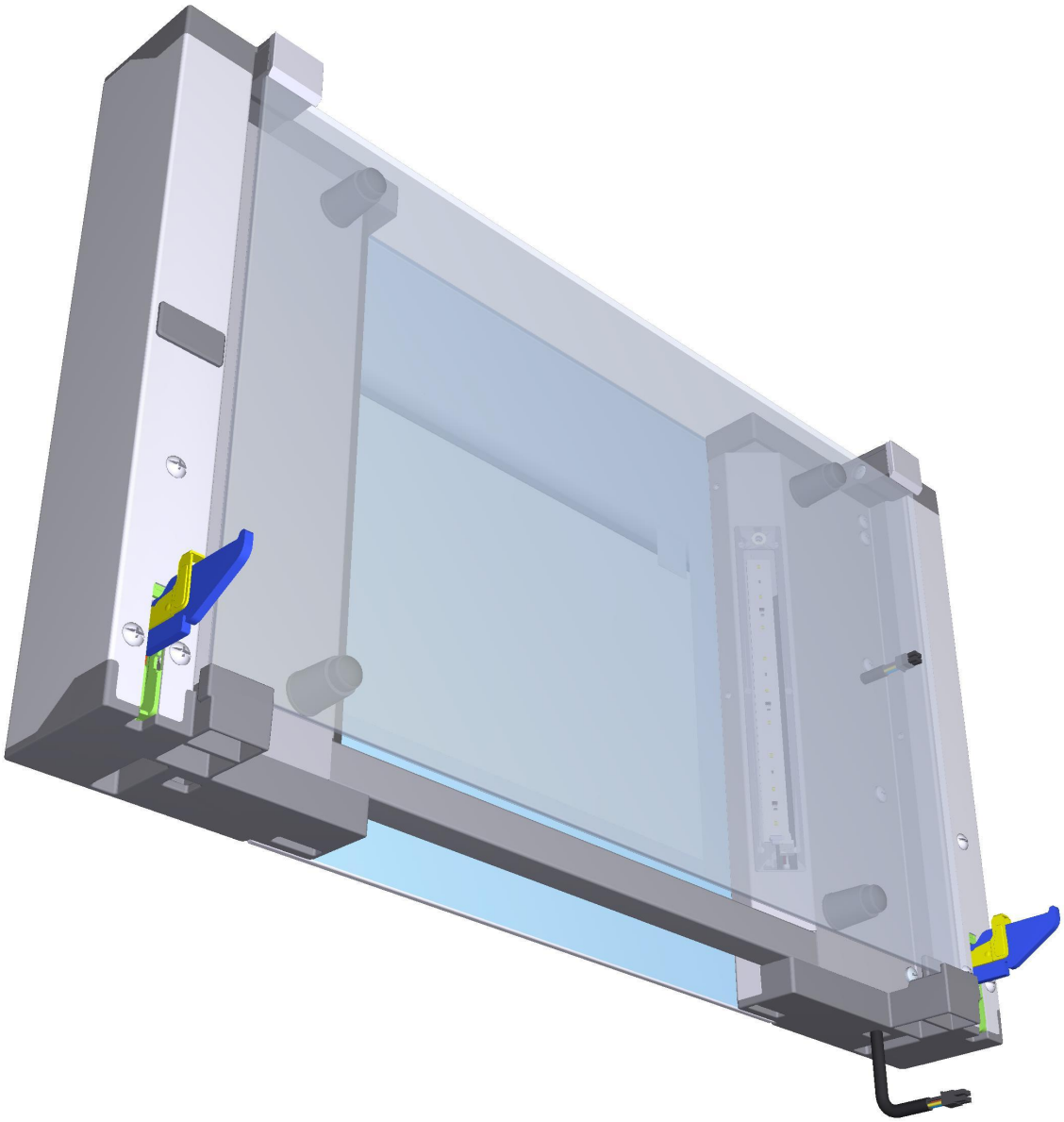

COMPONENT			SPARE PART		
Code	*Description*	*Image*	*Code*	*Description*	*Kit components*
0B1286A	0B1286A0		0B1286A0	0B1286A0	
0B1288A	0B1288A0		0B1288A0	0B1288A0	
LP1050A	BL SHOP.PRO L180 COMPLETE LED BA		KLP1050A	L180 COMPLETE LED LIGHT BAR KIT	Code / Description / Qty / UOM LP1050A0 — BL SHOP.PRO L180 COMPLETE LED BAR — 1.000 — PC VI1014A0 — STAINLESS STEEL WASHER 4.5X9X0.8 — 1.000 — PC VI1220A1 — 4,2x12 TCB SELF-TAPPING SCREW — 1.000 — PC
TB3301A	TB3301A0		KTB3301A	BL SP 460X330 DROPDOWN HANDLE TUBE KIT	Code / Description / Qty / UOM TB3301A0 — TB3301A0 — 1.000 — PC VI1147A0 — 5X25 STAINLESS STEEL SCREW — 4.000 — PC VM2456A0 — BAKERLUX SHOP.PRO HANDLE END — 1.000 — PC VM2489A0 — SP HANDLE END KIT + STYLUS KIT — 1.000 — PC VM2527A0 — STYLUS PEN FOR SP — 1.000 — PC

COMPONENT			SPARE PART		
Code	*Description*	*Image*	*Code*	*Description*	*Kit components*
VM2456A	BAKERLUX SHOP.PRO HANDLE END		KVM2456A	2 PCS BAKERLUX SHOP.PRO HANDLE END KIT	Code / Description / Qty / UOM VI1147A0 — 5X25 STAINLESS STEEL SCREW — 4.000 — PC VM2456A0 — BAKERLUX SHOP.PRO HANDLE END — 1.000 — PC VM2489A0 — SP HANDLE END KIT + STYLUS KIT — 1.000 — PC VM2527A0 — STYLUS PEN FOR SP — 1.000 — PC
VM2471A	BL SP LOWER CLAMP INT LOCK GLASS SLIDER	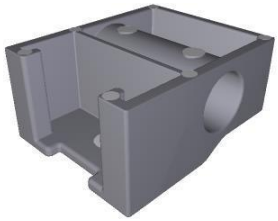	KVM2471A	BL SP INTERNAL GLASS LOCK HOLDER KIT	Code / Description / Qty / UOM VI1998A0 — ZINC PLATED SCREW 5X30 TCB — 2.000 — PC VM2471A0 — BL SP LOWER CLAMP INT LOCK GLASS SLIDER — 1.000 — PC VM2472A0 — BL SP UPPER CLAMP INT LOCK GLASS SLIDER — 1.000 — PC
VM2503A	SLIDE TO FIX INTERNAL NON REMOV GLASS SP		KVM2503A	BL SP INT FIXED GLASS LOCK 2 PCS KIT	Code / Description / Qty / UOM VM2503A0 — SLIDE TO FIX INTERNAL NON REMOV GLASS SP — 2.000 — PC
VM2464A	SHOP.PRO LEFT UPPER CAP DROP DOWN DOOR	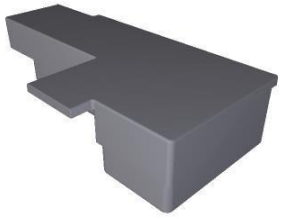	KVM2464A	BL SP LEFT UPPER DROPDOWN DOOR CAP KIT	Code / Description / Qty / UOM VM2464A0 — SHOP.PRO LEFT UPPER CAP DROP DOWN DOOR — 1.000 — PC

COMPONENT			SPARE PART		
Code	*Description*	*Image*	*Code*	*Description*	*Kit components*
VM2472A	BL SP UPPER CLAMP INT LOCK GLASS SLIDER	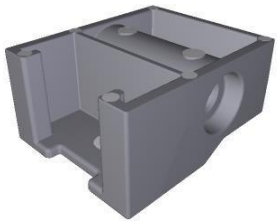	KVM2471A	BL SP INTERNAL GLASS LOCK HOLDER KIT	Code / Description / Qty / UOM VI1998A0 — ZINC PLATED SCREW 5X30 TCB — 2.000 — PC VM2471A0 — BL SP LOWER CLAMP INT LOCK GLASS SLIDER — 1.000 — PC VM2472A0 — BL SP UPPER CLAMP INT LOCK GLASS SLIDER — 1.000 — PC
VM2503A	SLIDE TO FIX INTERNAL NON REMOV GLASS SP		KVM2503A	BL SP INT FIXED GLASS LOCK 2 PCS KIT	Code / Description / Qty / UOM VM2503A0 — SLIDE TO FIX INTERNAL NON REMOV GLASS SP — 2.000 — PC
VM2463A	SHOP.PRO RIGHT UPPER CAP DROP DOWN DOOR		KVM2463A	BL SP RIGHT UPPER DROPDOWN DOOR CAP KIT	Code / Description / Qty / UOM VM2463A0 — SHOP.PRO RIGHT UPPER CAP DROP DOWN DOOR — 1.000 — PC
VM2461A	BL SP RIGHT LOWER DROPDOWN DOOR CAP KIT	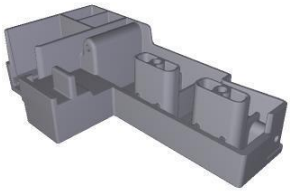	KVM2461A	BL SP RIGHT LOWER DROPDOWN DOOR CAP KIT	Code / Description / Qty / UOM VM2461A0 — BL SP RIGHT LOWER DROPDOWN DOOR CAP KIT — 1.000 — PC
VM2462A	BL SP LEFT LOWER DROPDOWN DOOR CAP	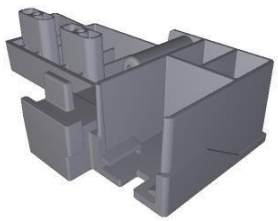	KVM2462A	BL SP LEFT LOWER DROPDOWN DOOR CAP KIT	Code / Description / Qty / UOM VM2462A0 — BL SP LEFT LOWER DROPDOWN DOOR CAP — 1.000 — PC

COMPONENT			SPARE PART		
Code	*Description*	*Image*	*Code*	*Description*	*Kit components*
VM1630A	INTERNAL GLASS PUSHING CAP		KVM1630A	CAP FOR INTERNAL GLASS 10 PCS KIT	Code: VM1630A1 — Description: INTERNAL GLASS PUSHING CAP — Qty: 10.000 — UOM: PC
VM2478A	BL SP GLASS H4 PUSHING BRACKET		KVM2478A	BL SHOP.PRO H4 GLASS SUPPORT 4 PCS KIT	Code: VM1630A1 — Description: INTERNAL GLASS PUSHING CAP — Qty: 4.000 — UOM: PC Code: VM2478A0 — Description: BL SP GLASS H4 PUSHING BRACKET — Qty: 4.000 — UOM: PC
CE1095A	4 POLES MICROFIT 2 M BUS CABLE		KCE1095A	4POLES 2M BUS CABLE KIT POWER-CONTROL	Code: CE1095A0 — Description: 4 POLES MICROFIT 2 M BUS CABLE — Qty: 1.000 — UOM: PC
CE1285A	EMI ROUND FERRITE MOD.2643801502	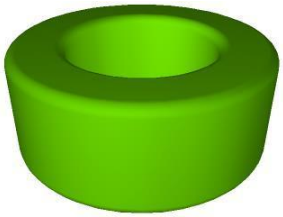	KCE1285A	ROUND FERRITE ELECTROMAGN PROT. 2PCS KIT	Code: CE1285A0 — Description: EMI ROUND FERRITE MOD.2643801502 — Qty: 2.000 — UOM: PC
CR1111A	BLSP STEFANIA DROPDOWN DOOR HINGE		KCR1111A	BAKERLUX SHOP.PRO STEFANIA HINGE KI	Code: CR1111A0 — Description: BLSP STEFANIA DROPDOWN DOOR HINGE — Qty: 1.000 — UOM: PC Code: VI1280A3 — Description: M5x10 TC1/2T SCREW — Qty: 3.000 — UOM: PC

COMPONENT			SPARE PART		
Code	*Description*	*Image*	*Code*	*Description*	*Kit components*
PE2107A	BAKERLUX SHOP.PRO LED COMPLETE CONTROL		KPE2107A	BAKERLUX SP LED CONTROL BOARD KIT	Code / Description / Qty / UOM PE2107A2 — BAKERLUX SHOP.PRO LED COMPLETE CONTROL — 1.000 — PC VI1147A0 — 5X25 STAINLESS STEEL SCREW — 2.000 — PC
VM2512A	BL SP DOOR-MICROSWITCH SOFT CLOSING		KVM2512A	BL SP DOOR-MICROSWITCH SOFT CLOSING KI	Code / Description / Qty / UOM VM1339A0 — — 1.000 — PC
VT1323A	SP STEFANIA 357x364x4 EXTERNAL GLASS		KVT1323A	BL SHOP.PRO STEFANIA EXTERNAL GLASS KIT	Code / Description / Qty / UOM 0B0386A0 — SP STE-ELE EXT GLASS SUPPORT PROFILE — 2.000 — PC SL1185A1 — — 2.000 — PC VI1220A1 — 4,2x12 TCB SELF-TAPPING SCREW — 6.000 — PC VT1323A0 — SP STEFANIA 357x364x4 EXTERNAL GLASS — 1.000 — PC
			KDR1285A	BL SHOP.PRO STEFANIA EXTER DOOR KIT LEFT	Code / Description / Qty / UOM 0B1293A0 — SP STE-ELE RIGHT DOOR LEFT EXT COLUMN — 1.000 — PC 0B1294A0 — SP STE-ELE RIGHT DOOR LEFT INT COLUMN — 1.000 — PC 0B1295B0 — SP STE-ELE RIGHT DOOR RIGHT EXT COLUMN — 1.000 — PC 0B1296B0 — SP STE-ELE RIGHT DOOR RIGHT INT COLUMN — 1.000 — PC CR1040A0 — DOOR LATCH FOR EL.MECH. LOCKING SYSTEM — 1.000 — PC

COMPONENT			SPARE PART		
Code	*Description*	*Image*	*Code*	*Description*	*Kit components*
VT1323A	SP STEFANIA 357x364x4 EXTERNAL GLASS		KDR1285A	BL SHOP.PRO STEFANIA EXTER DOOR KIT LEFT	

Code	Description	Qty	UOM
ML1005A0	DE5 DF0.6 H18 COMPRESSIO N SPRING	2.000	PC
SL1185A0		2.000	PC
TB1562A0	DOOR LATERAL BEAM SP600	2.000	PC
TB3303A0	SHOP.PRO STE-ELE FLAG DOOR HANDLE TUBE	1.000	PC
VI1036A0	ST STEEL STRIPED THREAD M10 FTT/C INSERT	1.000	PC
VI1147A0	5X25 STAINLESS STEEL SCREW	20.000	PC
VI1220A1	4,2x12 TCB SELF-TAPPIN G SCREW	12.000	PC
VI1998A0	ZINC PLATED SCREW 5X30 TCB	2.000	PC
VM1209A0	SHOP.PRO LOCK PIN WASHER	1.000	PC
VM1630A1	INTERNAL GLASS PUSHING CAP	4.000	PC
VM2274A0	GROOVED BUSHING	1.000	PC
VM2275A0	SMOOTH BUSHING	1.000	PC
VM2456A0	BAKERLUX SHOP.PRO HANDLE END	1.000	PC
VM2465A0	SP SIDE-OPENIN G DOOR RIGHT LOWER CAP KIT	1.000	PC
VM2466A0	BL SP LEFT LOWER LATERAL DOOR CAP	1.000	PC
VM2467A0	SP SIDE-OPENIN G DOOR RIGHT UPPER CAP KIT	1.000	PC
VM2468A0	BL SP LEFT UPPER LATERAL DOOR CAP	1.000	PC

COMPONENT			SPARE PART		
Code	*Description*	*Image*	*Code*	*Description*	*Kit components*
VT1323A	SP STEFANIA 357x364x4 EXTERNAL GLASS		KDR1285A	BL SHOP.PRO STEFANIA EXTER DOOR KIT LEFT	Code / Description / Qty / UOM VM2470A0 SLIDE TO FIX INTERNAL GLASS SHOP.PRO 2.000 PC VM2471A0 BL SP LOWER CLAMP INT LOCK GLASS SLIDER 1.000 PC VM2472A0 BL SP UPPER CLAMP INT LOCK GLASS SLIDER 1.000 PC VM2473A0 BL SP INT GLASS HINGE LOWER LOCK PIN 1.000 PC VM2474A0 BL SP INT GLASS HINGE UPPER LOCK PIN 1.000 PC VM2478A0 BL SP GLASS H4 PUSHING BRACKET 4.000 PC VM2489A0 SP HANDLE END KIT + STYLUS KIT 1.000 PC VM2504A0 DOWEL TO GUIDE SLIDE SPRING SHOP.PRO 2.000 PC VM2527A0 STYLUS PEN FOR SP 1.000 PC VT1323A0 SP STEFANIA 357x364x4 EXTERNAL GLASS 1.000 PC
			KDR1284A	BL SHOP.PRO STEFANIA EXTERNAL DOOR KI	Code / Description / Qty / UOM 0B1293A0 SP STE-ELE RIGHT DOOR LEFT EXT COLUMN 1.000 PC 0B1294A0 SP STE-ELE RIGHT DOOR LEFT INT COLUMN 1.000 PC 0B1295B0 SP STE-ELE RIGHT DOOR RIGHT EXT COLUMN 1.000 PC 0B1296B0 SP STE-ELE RIGHT DOOR RIGHT INT COLUMN 1.000 PC

COMPONENT			SPARE PART		
Code	*Description*	*Image*	*Code*	*Description*	*Kit components*
VT1323A	SP STEFANIA 357x364x4 EXTERNAL GLASS		KDR1284A	BL SHOP.PRO STEFANIA EXTERNAL DOOR KI	

Code	Description	Qty	UOM
CR1040A0	DOOR LATCH FOR EL.MECH. LOCKING SYSTEM	1.000	PC
ML1005A0	DE5 DF0.6 H18 COMPRESSIO N SPRING	2.000	PC
SL1185A0		2.000	PC
TB1562A0	DOOR LATERAL BEAM SP600	2.000	PC
TB3303A0	SHOP.PRO STE-ELE FLAG DOOR HANDLE TUBE	1.000	PC
VI1036A0	ST STEEL STRIPED THREAD M10 FTT/C INSERT	1.000	PC
VI1147A0	5X25 STAINLESS STEEL SCREW	20.000	PC
VI1220A1	4,2x12 TCB SELF-TAPPIN G SCREW	12.000	PC
VI1998A0	ZINC PLATED SCREW 5X30 TCB	2.000	PC
VM1209A0	SHOP.PRO LOCK PIN WASHER	1.000	PC
VM1630A1	INTERNAL GLASS PUSHING CAP	4.000	PC
VM2274A0	GROOVED BUSHING	1.000	PC
VM2275A0	SMOOTH BUSHING	1.000	PC
VM2456A0	BAKERLUX SHOP.PRO HANDLE END	1.000	PC
VM2465A0	SP SIDE-OPENIN G DOOR RIGHT LOWER CAP KIT	1.000	PC
VM2466A0	BL SP LEFT LOWER LATERAL DOOR CAP	1.000	PC
VM2467A0	SP SIDE-OPENIN G DOOR RIGHT UPPER CAP KIT	1.000	PC

COMPONENT			SPARE PART		
Code	*Description*	*Image*	*Code*	*Description*	*Kit components*
VT1323A	SP STEFANIA 357x364x4 EXTERNAL GLASS		KDR1284A	BL SHOP.PRO STEFANIA EXTERNAL DOOR KI	

Code	Description	Qty	UOM
VM2468A0	BL SP LEFT UPPER LATERAL DOOR CAP	1.000	PC
VM2470A0	SLIDE TO FIX INTERNAL GLASS SHOP.PRO	2.000	PC
VM2471A0	BL SP LOWER CLAMP INT LOCK GLASS SLIDER	1.000	PC
VM2472A0	BL SP UPPER CLAMP INT LOCK GLASS SLIDER	1.000	PC
VM2473A0	BL SP INT GLASS HINGE LOWER LOCK PIN	1.000	PC
VM2474A0	BL SP INT GLASS HINGE UPPER LOCK PIN	1.000	PC
VM2478A0	BL SP GLASS H4 PUSHING BRACKET	4.000	PC
VM2489A0	SP HANDLE END KIT + STYLUS KIT	1.000	PC
VM2504A0	DOWEL TO GUIDE SLIDE SPRING SHOP.PRO	2.000	PC
VM2527A0	STYLUS PEN FOR SP	1.000	PC
VT1323A0	SP STEFANIA 357x364x4 EXTERNAL GLASS	1.000	PC

KDR1280A	BL SHOP.PRO STEFANIA COMPLETE DOOR KIT		

Code	Description	Qty	UOM
0B1285A0	0B1285A0	1.000	PC
0B1286A0	0B1286A0	1.000	PC
0B1287A0	0B1287A0	1.000	PC
0B1288A0	0B1288A0	1.000	PC
CR1111A0	BLSP STEFANIA DROPDOWN DOOR HINGE	2.000	PC
LP1050A0	BL SHOP.PRO L180 COMPLETE LED BAR	1.000	PC
SL1185A0		2.000	PC

COMPONENT			SPARE PART		
Code	*Description*	*Image*	*Code*	*Description*	*Kit components*
VT1323A	SP STEFANIA 357x364x4 EXTERNAL GLASS		KDR1280A	BL SHOP.PRO STEFANIA COMPLETE DOOR KIT	

Code	Description	Qty	UOM
TB1562A0	DOOR LATERAL BEAM SP600	1.000	PC
TB3301A0	TB3301A0	1.000	PC
VI1014A0	STAINLESS STEEL WASHER 4.5X9X0.8	1.000	PC
VI1147A0	5X25 STAINLESS STEEL SCREW	10.000	PC
VI1220A1	4,2x12 TCB SELF-TAPPING SCREW	10.000	PC
VI1280A3	M5x10 TC1/2T SCREW	6.000	PC
VI1998A0	ZINC PLATED SCREW 5X30 TCB	2.000	PC
VM1339A0		1.000	PC
VM1630A1	INTERNAL GLASS PUSHING CAP	1.000	PC
VM2456A0	BAKERLUX SHOP.PRO HANDLE END	1.000	PC
VM2461A0	BL SP RIGHT LOWER DROPDOWN DOOR CAP KIT	1.000	PC
VM2462A0	BL SP LEFT LOWER DROPDOWN DOOR CAP	1.000	PC
VM2463A0	SHOP.PRO RIGHT UPPER CAP DROP DOWN DOOR	1.000	PC
VM2464A0	SHOP.PRO LEFT UPPER CAP DROP DOWN DOOR	1.000	PC
VM2471A0	BL SP LOWER CLAMP INT LOCK GLASS SLIDER	1.000	PC
VM2472A0	BL SP UPPER CLAMP INT LOCK GLASS SLIDER	1.000	PC
VM2478A0	BL SP GLASS H4 PUSHING BRACKET	1.000	PC

COMPONENT			SPARE PART		
Code	*Description*	*Image*	*Code*	*Description*	*Kit components*
VT1323A	SP STEFANIA 357x364x4 EXTERNAL GLASS		KDR1280A	BL SHOP.PRO STEFANIA COMPLETE DOOR KIT	Code / Description / Qty / UOM VM2489A0 — SP HANDLE END KIT + STYLUS KIT — 1.000 — PC VM2503A0 — SLIDE TO FIX INTERNAL NON REMOV GLASS SP — 2.000 — PC VM2527A0 — STYLUS PEN FOR SP — 1.000 — PC VT1323A0 — SP STEFANIA 357x364x4 EXTERNAL GLASS — 1.000 — PC VT1329A0 — SP STEFANIA 515x318.5x4 INNER GLASS — 1.000 — PC
VT1329A	SP STEFANIA 515x318.5x4 INNER GLASS		KVT1329A	BL SP STEFANIA INTERNAL DOOR GLASS KIT	Code / Description / Qty / UOM VT1329A0 — SP STEFANIA 515x318.5x4 INNER GLASS — 1.000 — PC

ASM3438A/0.D01 - Electrical system

FRONT

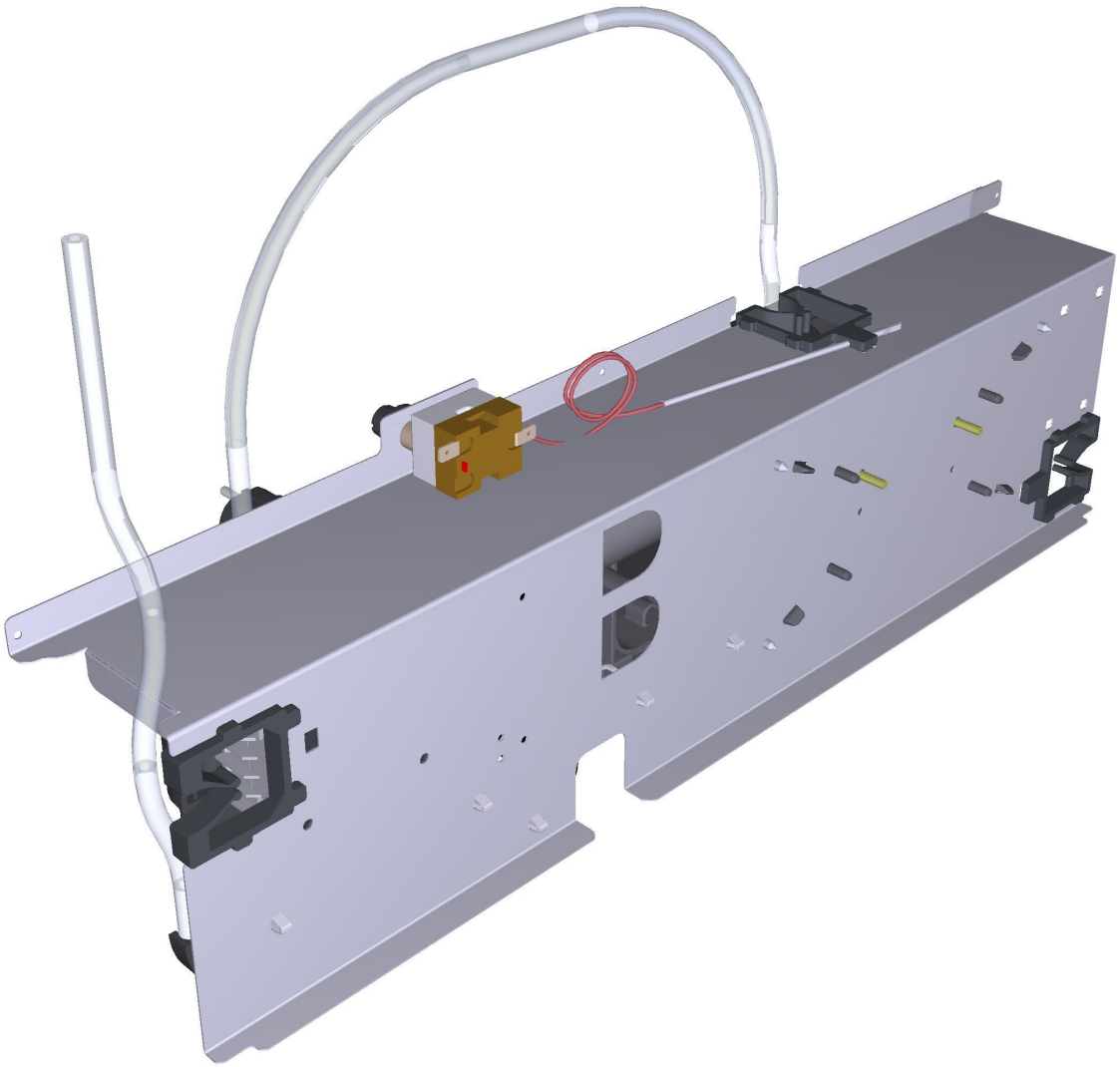

ASM3438A/0.D01 - Electrical system

REAR

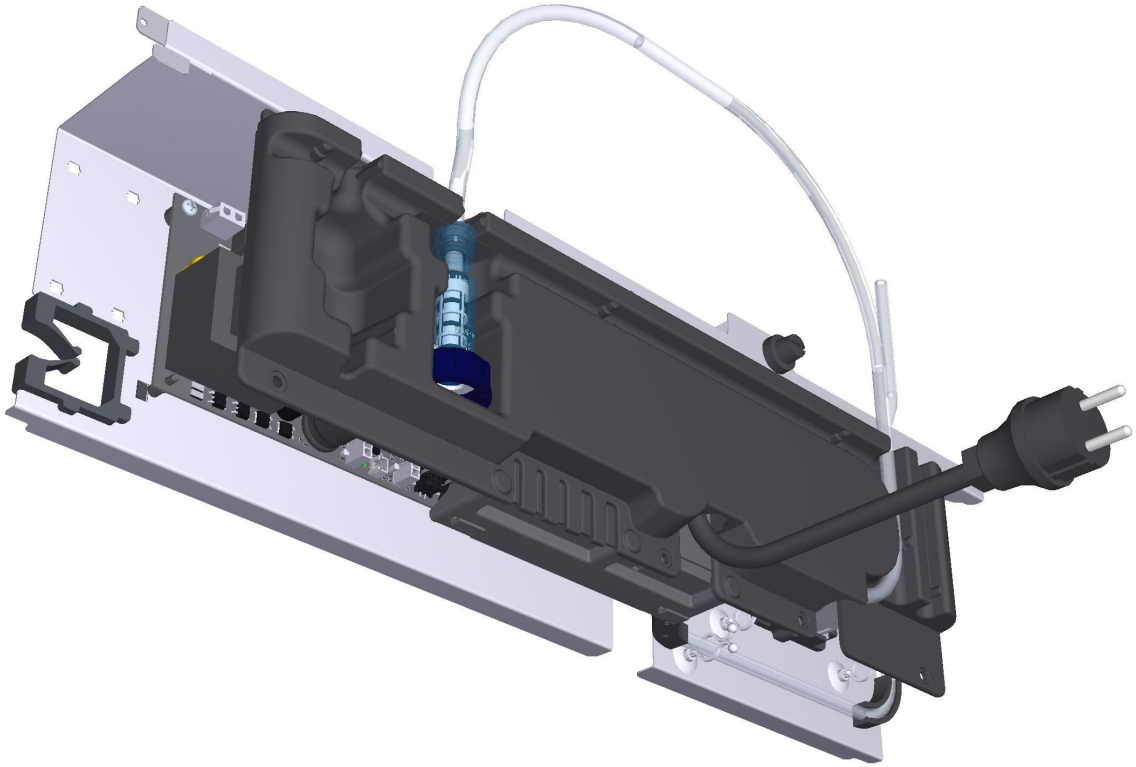

COMPONENT			SPARE PART		
Code	*Description*	*Image*	*Code*	*Description*	*Kit components*
0P1021A	COMPONENTS HOLDING PANEL STE-ARI SP		0P1021A0	COMPONENTS HOLDING PANEL STE-ARI SP	
VE1115A	20 A 230V 4 POLES MINICONTACTOR	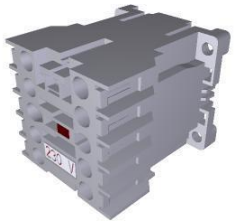	KVE1115A	20A 230V 4 POLES MINICONTACTOR KI	Code / Description / Qty / UOM VE1115A0 — 20 A 230V 4 POLES MINICONTACTOR — 1.000 — PC VM1075A1 — PLASTIC CLIP TO FIX CONTACTORS — 4.000 — PC
VM1056A	SMALL CONTACTOR BRACKET VE1115A		VM1056A0	SMALL CONTACTOR BRACKET VE1115A	
VL1145A	VL1145A0		KVL1145A	3/4-JG8 FITTING WITH FILTER AND NRV KIT	Code / Description / Qty / UOM VL1145A1 — — 1.000 — PC
PE2102A	BL LED/TOUCH/PLUS 230 V POWER CARD	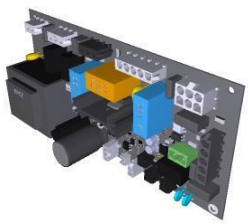	KPE2102A	BL LED/TOUCH/MASTER 230V POWER CARD KIT	Code / Description / Qty / UOM PE2102A2 — BL LED/TOUCH/PLUS 230V POWER BOAR — 1.000 — PC VI1988A0 — AUTOTHREADING SCREW 4,2x19 TCB+ INOX — 3.000 — PC VM1187A0 — POWER BOARD FRAME SHOP.PRO — 1.000 — PC

COMPONENT			SPARE PART		
Code	*Description*	*Image*	*Code*	*Description*	*Kit components*
VM1187A	POWER BOARD FRAME SHOP.PRO		VM1187A0	POWER BOARD FRAME SHOP.PRO	
CE1581A	CABLE H07RNF 3G1.5 L1.5MT+K1/6+SCHUKO		KCE1581A	H07RNF 3G1.5 L1.5 MT + SHUKO PLUG KIT	Code: CE1581A0 · Description: CABLE H07RNF 3G1.5 L1.5MT+K1/6+ SCHUKO · Qty: 1.000 · UOM: PC
CN1003A	6,3 Uf MOTOR CAPACITOR	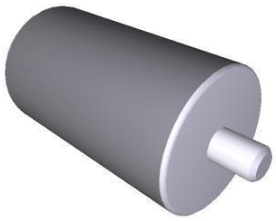	KCN1003A	6,3 uF MOTOR CAPACITOR KIT	Code: CN1003A0 · Description: 6,3 Uf MOTOR CAPACITOR · Qty: 1.000 · UOM: PC Code: VI1931A0 · Description: M8x1.65 H4 CH13 ZINC PLATED NUT · Qty: 1.000 · UOM: PC Code: VI1932A0 · Description: D8 INDENTED ZINC PLATED WASHER · Qty: 1.000 · UOM: PC
MR1025A	3 POLES 450V 41A+GROUND TERMINAL BLOCK		KMR1025A	3 POLES TERMINAL BLOCK KIT	Code: MR1025A1 · Description: 3 POLES 450V 41A+GROUND TERMINAL BLOCK · Qty: 1.000 · UOM: PC
RC1006A	D8 PET PIPE GUIDE BEND		KRC1006A	20 PCS. Ø8 PET PIPE GUIDE BEND KI	Code: RC1006A0 · Description: D8 PET PIPE GUIDE BEND · Qty: 20.000 · UOM: PC

COMPONENT			SPARE PART		
Code	*Description*	*Image*	*Code*	*Description*	*Kit components*
TB3280A	TB3280A0		KTB2529A KTB1959A	Ø8 TRANSPARENT HUMIDITY PIPE 2 M KIT Ø8 TB1815 TRANSPARENT PIPE 5M KIT	Code / Description / Qty / UOM TB1815A0 / 7,93x4,75 PE TRANSP. PIPE (JG #PE08100N) / 2.000 / M Code / Description / Qty / UOM TB1815A0 / 7,93x4,75 PE TRANSP. PIPE (JG #PE08100N) / 5.000 / M
TR1136A	318°C -0/+24 1 POLE SAFETY THERMOSTAT	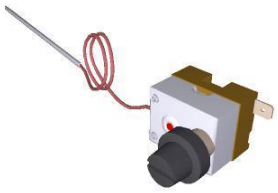	KTR1136A	318°C -0/+24 SAFETY THERMOSTAT KIT	Code / Description / Qty / UOM 0H7030A0 / THERMOSTAT BULB INLET COVER / 1.000 / PC GN1531A0 / THERMOSTAT BULB INLET SEALING / 1.000 / PC SL1045A0 / S57 BLACK SILICONE - 80ml CARTRIDGE / 1.000 / PC TR1136A0 / 318°C -0/+24 1 POLE SAFETY THERMOSTAT / 1.000 / PC VI1220A1 / 4,2x12 TCB SELF-TAPPING SCREW / 3.000 / PC
VI1328A	VI1328A0	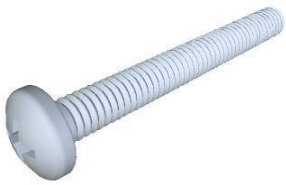	VI1328A0	VI1328A0	
VM1188A	POWER BOARD WIRES PASS-THROUGH		KVM1188A	POWER BOARD WIRES PASS-THROUGH 10PCS KIT	Code / Description / Qty / UOM VM1188A0 / POWER BOARD WIRES PASS-THROUGH / 10.000 / PC

COMPONENT			SPARE PART		
Code	*Description*	*Image*	*Code*	*Description*	*Kit components*
VM2482A	ELECTR COMPONENTS HOLDER FRAME SHOP.PRO	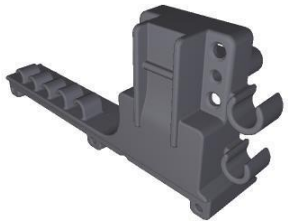	KVM2482A	BAKERLUX SP ELECTR COMPONENTS HOLDER KIT	Code / Description / Qty / UOM VM2482A0 ELECTR COMPONENTS HOLDER FRAME SHOP.PRO 1.000 PC VM2484A0 ELECTRICAL CONNECTION CABLE CLAMP 1.000 PC
VM2483A	SHOP PRO COMPONENTS HOLDER COVER		KVM2483A	BL SHOP.PRO COMPONENTS HOLDER COVER KIT	Code / Description / Qty / UOM VM2483A1 SHOP PRO COMPONENTS HOLDER COVER 1.000 PC
VM2484A	ELECTRICAL CONNECTION CABLE CLAMP	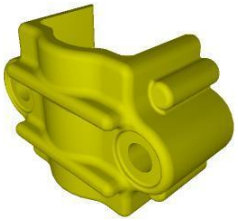	KVM2484A KVM2482A	CABLE LOCKS ELECTRICAL CONNECTION KIT BAKERLUX SP ELECTR COMPONENTS HOLDER KIT	Code / Description / Qty / UOM VM2484A0 ELECTRICAL CONNECTION CABLE CLAMP 1.000 PC Code / Description / Qty / UOM VM2482A0 ELECTR COMPONENTS HOLDER FRAME SHOP.PRO 1.000 PC VM2484A0 ELECTRICAL CONNECTION CABLE CLAMP 1.000 PC