EF716

The explosive view of EF716

比例 1:2

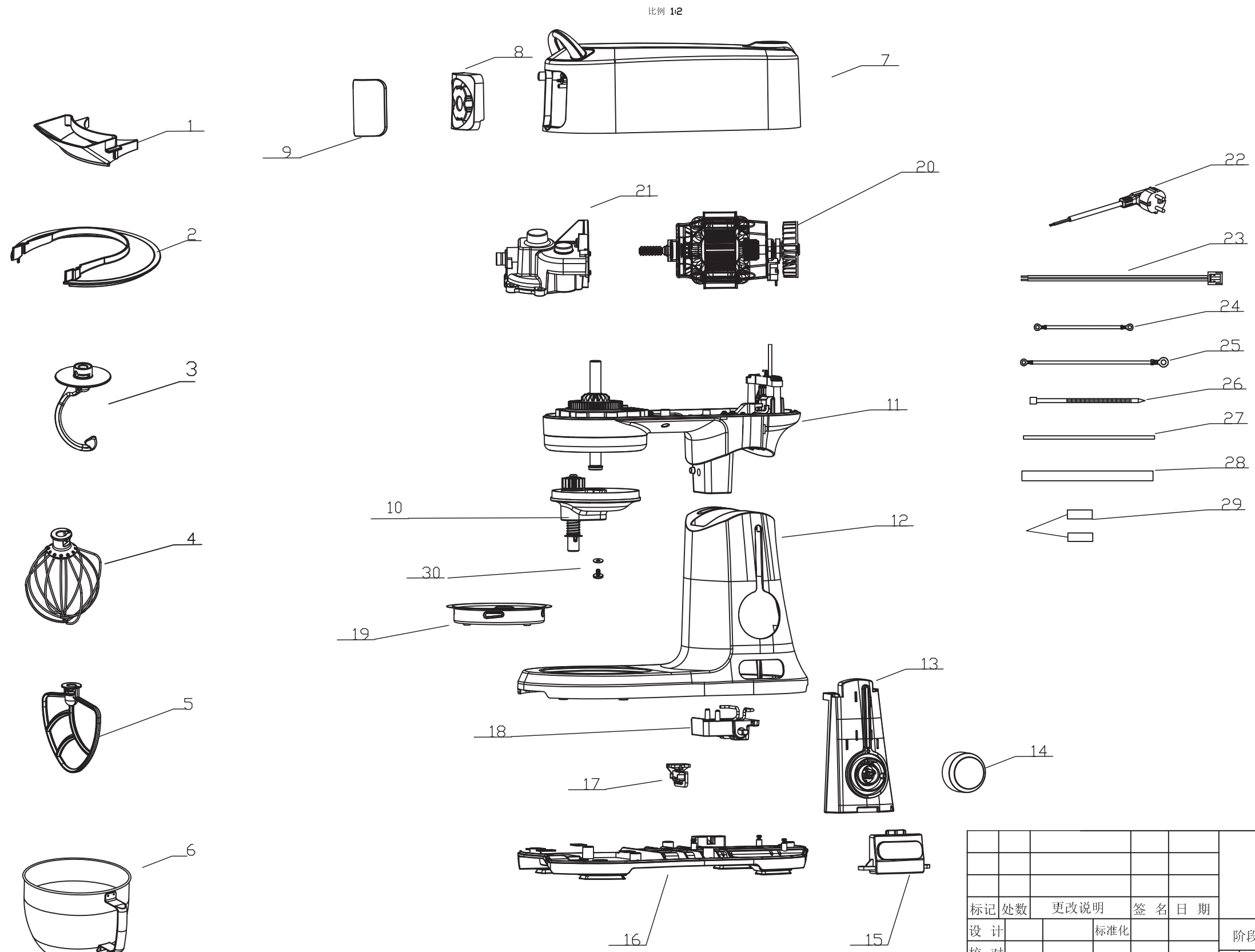

序号	零件	用量
30	Main shaft screw	1
29	Short Heat shrinkable casing	1
28	Thick Heat shrinkable casing	1
27	Thin Heat shrinkable casing	1
26	Ribbon	1
25	Ground lead for main machine	1
24	Top cover ground lead	1
23	Safety switch leads	1
22	Power cord assembly	1
21	Gear box assembly	1
20	Motor assembly	1
19	Bowl seat	1
18	Shaft assembly	1
17	Micro switch assembly	1
16	Bottom cover	1
15	Touch screen assembly	1
14	Knob assembly	1
13	PCB assembly	1
12	Bottom shell	1
11	Middle shell assembly	1
10	Planetary cover assembly	11
9	Front output cover assembly	1
8	Attachment mounting seat assembly	1
7	Top shell assembly	1
6	Stainless steel bowl	1
5	Beater	1
4	Whisk	1
3	Dough Hook	1
2	Bowl cover	3
1	Funnel	1

标记	处数	更改说明	签 名	日 期
设 计		标准化		
校 对				
审 核				
工 艺		批 准		

阶段标记	重量(g)	比例
A		
共 1 张	第 1 张	

伊丝顿电器有限公司

EF716简易爆炸图

EF716